1. Names and Parts -Q-AHD-TX10

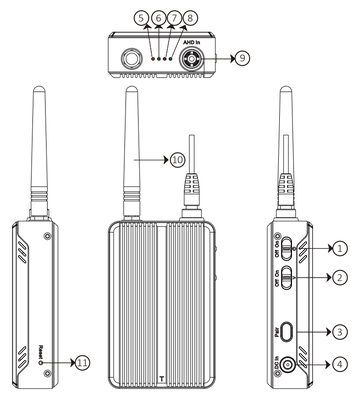

1. Power On/Off
2. Vibration On/Off
3. Pair-up Button
4. DC 5V In
5. Pair - Orange LED
6. Charge - Green LED
7. Low Power - Red LED
8. Power - Blue LED
9. AHD In
10. Antenna
11. Reset Button

※ This product is for Law Enforcement and Home Security Use Only!

2. Names and Parts - Q-AHD-RX10

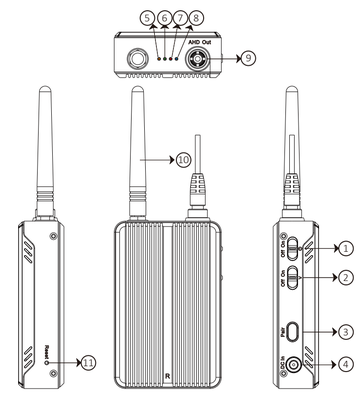

1. Power On/Off
2. Vibration On/Off
3. Pair-up Button
4. DC 5V In
5. Pair - Orange LED
6. Charge - Green LED
7. Low Power - Red LED
8. Power - Blue LED
9. AHD Out
10. Antenna
11. Reset Button

※ Do not remove serial number sticker!
Warranty is invalid if the sticker is tampered.

3. Package Content

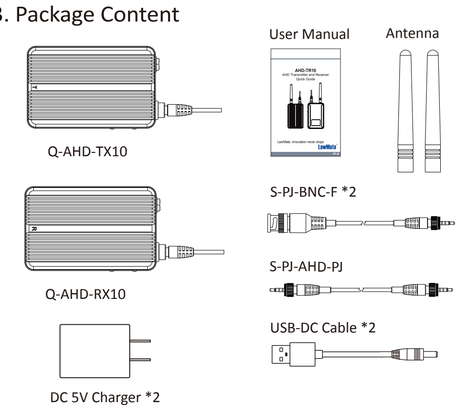

4. LED Indicators

LED Indicators	Device Status
Solid Blue LED	Device On
Solid Green LED	Battery Charging
Blinking Orange LED	Pairing Up
Blinking Red LED	Low Battery

5. Charge the Battery

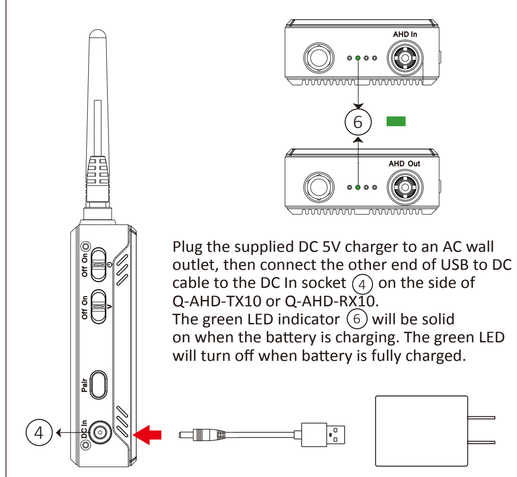

Plug the supplied DC 5V charger to an AC wall outlet, then connect the other end of USB to DC cable to the DC In socket (4) on the side of Q-AHD-TX10 or Q-AHD-RX10.
The green LED indicator (6) will be solid on when the battery is charging. The green LED will turn off when battery is fully charged.

※ Note: Only use the supplied AC/DC charger to charge the transmitter and receiver.

6. Pair up Q-AHD-TX10 and Q-AHD-RX10

1. Install the antenna onto both transmitter Q-AHD-TX10 and receiver Q-AHD-RX10.
2. Switch (1) to "On" to turn on both devices. Blue LED (8) will be solid on after power on.
3. Press pair button (3) on both transmitter and receiver at the same time, and hold the buttons for 7 seconds as shown in picture.
4. Orange LED (5) will blinks 2 seconds and the pair-up is done.
5. If the vibration switch (2) is switch to "On," both devices will vibrate 3 times for sucessful pair-up.
6. Press (11) to reset the device if it freezes.

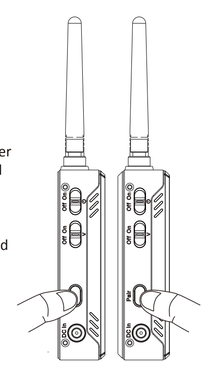

7. Use with PV-1000AHD and BU-18AHD

1. Connect Q-AHD-TX10 with BU-18AHD via AHD in port (9), or use cable S-PJ-BNC-F to connect to other AHD camera.

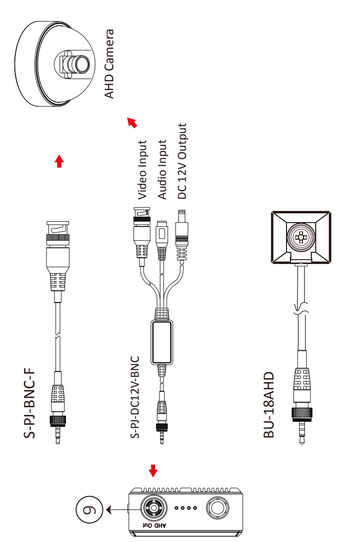

2. Insert one end of S-PJ-AHD-PJ to AHD out port (9) on Q-AHD-RX10, and the other end into AHD in port on PV-1000AHD.
Or use cable S-PJ-BNC-F to connect to other AHD DVR.

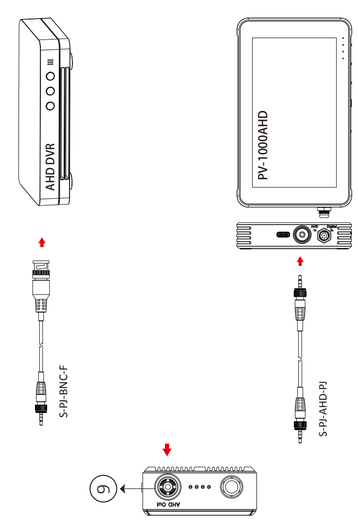

AHD-TR10

Q-AHD-TX10 Q-AHD-RX10

AHD Transmitter and Receiver
Quick Guide

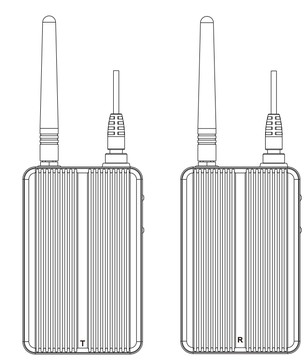

LawMate, innovation never stops

LawMate®

V1.3